Case-Report

Mahmut Cerkez Ergoren*, Gulten Tuncel, Sebnem Ozemri Sag and Sehime Gulsun Temel

A rare case of fructose-1,6-bisphosphatase deficiency: a delayed diagnosis story

Nadir bir Fruktoz-1,6-Bifosfataz eksikliği vakası: Bir geç tanı hikayesi

https://doi.org/10.1515/tjb-2019-0473
Received November 29, 2019; accepted September 18, 2020; published online October 7, 2020

Abstract

Objectives: Fructose-1,6-bisphosphatase deficiency (FBPase deficiency, OMIM 229700) is an early-onset rare genetic disorder caused by mutations in the FBP1 gene.
Case presentation: Our patient was 17-years-old when she was diagnosed with the disease. Initial sequencing analysis with Ion Torrent technology failed to detect the gross deletion that covered complete exon 2 (c.-24-26_170 + 5192del) of FBP1 gene and caused the delay in diagnosis. Deletion was then detected when sequencing was performed in an Illumina MiSeq platform.
Conclusions: This case emphasizes the importance of sequencing data analysis for precise diagnosis of rare diseases and therapy planning.

Keywords: FBPase deficiency; fructose-1,6-biphospatase; rare disease.

***Corresponding author: Assoc. Prof. Mahmut Cerkez Ergoren**, Department of Medical Biology, Near East University, Faculty of Medicine, 99138 Nicosia, Cyprus; and Near East University, DESAM Institute, Nicosia, 99138, TRNC, E-mail: mahmutcerkez.ergoren@neu.edu.tr
Gulten Tuncel, Department of Medical Biology, Near East University, Faculty of Medicine, Nicosia, TRNC; Near East University, DESAM Institute, Nicosia, TRNC
Sebnem Ozemri Sag, Department of Medical Genetics, Bursa Uludag University, Faculty of Medicine, Bursa, Turkey
Sehime Gulsun Temel, Department of Medical Genetics, Bursa Uludag University, Faculty of Medicine, Bursa, Turkey; Department of Histology & Embryology, Bursa Uludag University, Faculty of Medicine, Bursa, Turkey; and Department of Translational Medicine, Bursa Uludag University, Health Sciences Institute, Bursa, Turkey

Introduction

Fructose-1,6-bisphosphatase deficiency (FBPase deficiency, OMIM 229700) is a rare, autosomal recessively inherited disorder with an estimated prevalence between 1:350.000 and 1:900.000 [1]. The disease is caused by mutations in the *FBP1* gene (OMIM 611570), which encodes the FBPase enzyme involved in the gluconeogenesis pathway [2, 3]. The *FBP1* gene is located on chromosome 9 and spans a region of 37,117 bases (9q22.2–q22.3) [3]. Mutations causing FBPase deficiency include a number of single nucleotide changes, indels and duplications [4].

FBPase is a key enzyme that cleaves fructose-1,6-bisphosphate into fructose-6-phosphate, so its deficiency causes defects in gluconeogenesis, which results in impaired glucose production from all gluconeogenic precursors [5]. If not managed correctly, high intake of fructose, prolonged fasting and intercurrent infections can trigger acute attacks of ketotic hypoglycaemia and lactic acidosis in patients, usually in the first months of life [2]. When preventive treatment is applied, the prognosis is usually quite good. However, non-specific presentation of the disease and patients being asymptomatic between acute attacks can lead to cases of FBPase deficiency being confused with other metabolic disorders [1]. Consequently, precise diagnosis is critical as the disorder may become fatal with episodes of severe hypoglycaemia and is often possible by measuring FBPase enzymatic activity or by genetic testing [5, 6].

Patient and methods

The current study presents the case of a 17-year-old female from a consanguineous marriage with clinical manifestations suggestive of both FBPase deficiency and a mild form of Becker disease including

acute attacks, vomiting, hypoglycaemia, hyperventilation, coma, hepatomegaly and myopia.

According to the medical history of the patient, the first hypoglycaemic attack was reported when she was 18-months old and nutrition therapy was given with the pre-diagnosis of glycogen storage disease. However, acute attacks continued, which were accompanied by vomiting and hyperventilation at least once a year. Hepatomegaly and myopia were other symptoms indicative of FBPase deficiency. Previously, the genes that are associated with glycogen storage disease (G6PC, AGL (exon 2), GBE1 (exon 1 and 11), PYGL, SLC37A4, PHKA2 (exon 19 and 21), PHKG2, GYS1, GYS2, PHKB (exons 6, 11, 12, 14), SLCA2, PHKA1, PHKA2, FBP1 (exon 1), GYG1, PGK1, SLC2A2, ALDOB, ALDOA, PGAM2 were analysed with Ion Torrent sequencing technologies in a genetic diagnosis centre and no mutations were detected. Her enzymatic activity in the liver (NRV=25_70 nmol/mg of protein) was 3.1 when tested.

When the patient was admitted to Near East University Hospital with these symptoms last year, clinical exome sequencing was performed. DNA was isolated from peripheral blood samples and exons of 1,124 genes present in the Clinical Exome Solution panel were amplified. Sequencing was then performed in an Illumina MiSeq platform. Confirmation of sequencing was done with exon-specific PCR. Primers were designed within exon 2, within deletion region and equal concentrations of DNA were used in PCR.

Due to the delay in diagnosis, the patient was recommended to undergo an MRI examination for detection of possible brain damage due to the high number of hypoglycaemic attacks. Genetic counselling was advised for the patient and her family.

Results

Family pedigree is represented in Figure 1. The proband's cousin was diagnosed with epilepsy and her older uncle had recently been diagnosed with myasthenia gravis.

In clinical exome sequencing data analysis, a 5412bp-long gross deletion that covered complete exon 2 (c.-24-26_170 + 5192del) according to reference sequence NM_001127628.2, which was previously termed as exon 1 according to reference sequence NM_000507.4, in the *FBP1* gene was detected in a homozygous state in the patient [7] Figure 2A. Confirmation of sequencing results with exon-specific PCR is shown in Figure 2B. No bands were visible in the proband indicating the absence of exon 2.

No significant pathological change was reported in the brain MRI examination of the patient, indicating no brain damage due to the high number of hypoglycaemic attacks that the patient has experienced before diagnosis.

Discussion

The rare genetic disease, fructose 1,6-bisphosphatase (FBPase) deficiency, is caused by mutations in the *FBP1* gene and manifests itself in the first months of life with episodes of hypoglycaemia and lactic acidosis. Diagnosis is important, as patients should be given a fructose- and sucrose-restricted diet, exogenous glucose administration and should avoid prolonged fasting to prevent severe hypoglycaemic attacks, which can cause brain damage and can even be fatal [1, 8, 9].

In our case, symptoms of the FBPase deficiency were initially reported in the first 18-months of life but diagnosis was not possible until she was 17. The condition was confused with glycogen storage disease. When sequencing

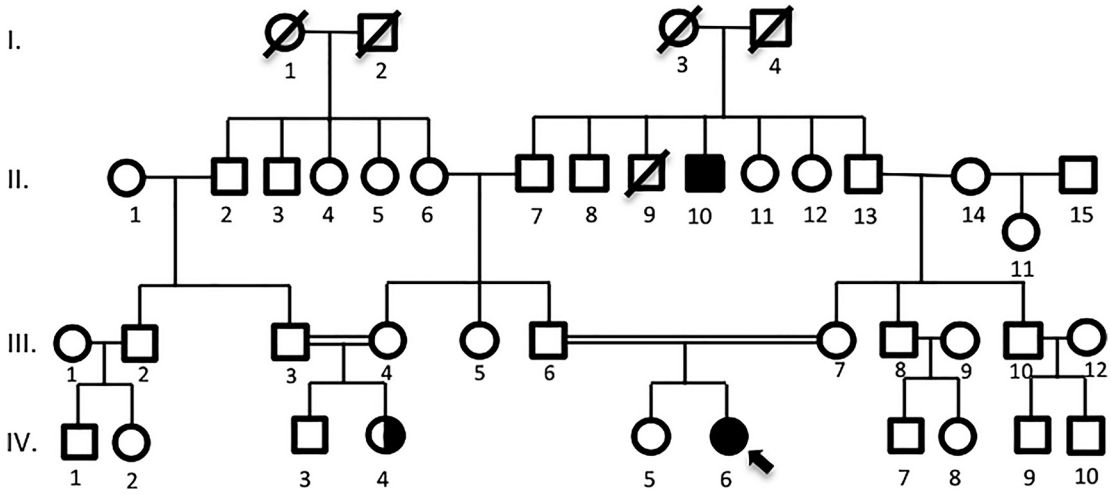

Figure 1: Pedigree analysis of the proband (IV-6) is shown above, who was born to a consanguineous marriage. Her cousin (IV-6) was diagnosed with epilepsy and her older uncle (II-10) was diagnosed with M. Gravis.

a)

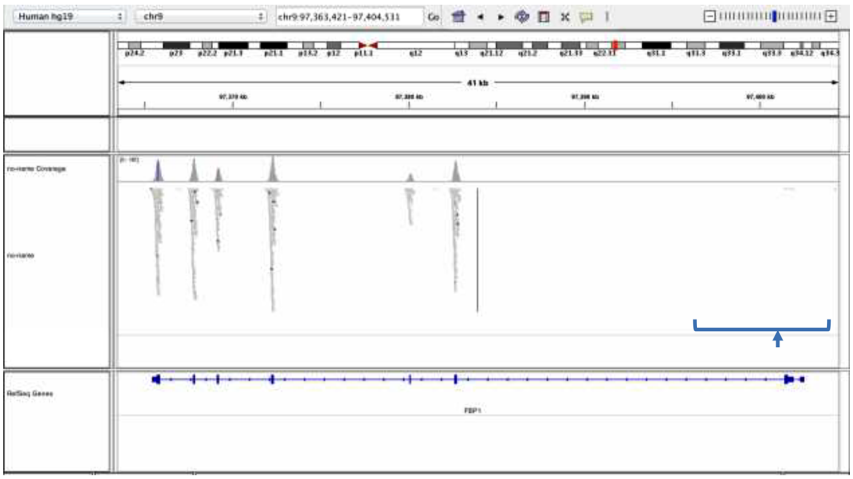

b)

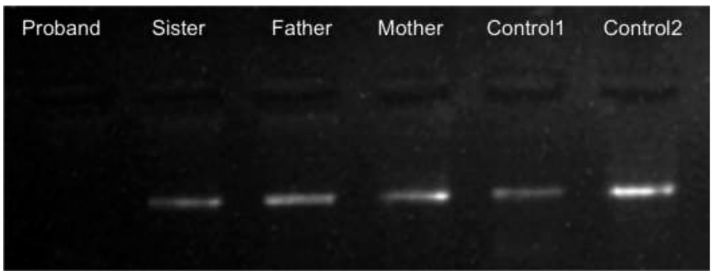

Figure 2: Molecular genetic analysis results of the proband. (a) Integrative Genomics Viewer (IGV) analysis of the patient's *FBP1* sequencing result is shown. Sequence is aligned to reference sequence NM_001127628.2. No reads are obtained from exon 2 of the *FBP1* gene, suggesting a gross deletion of the exon. (b) The electrophoresis gel image of the exon-specific PCR analysis to confirm the exon 2 deletion of FBP1 is shown above. Primers were designed within exon 2. Homozygous deletion in the proband (no band) and heterozygous deletions in the mother, father and sister (faint bands) were confirmed by comparison of band intensities with the control bands from a heterozygous individual (Control1-faint band) and from the homozygous healthy individual (Control2--strong band). EtBr signalling under ultraviolet light was used for gel imaging.

was performed, even though it is the most common *FBP1* variation in the Turkish population, homozygous exon 2 deletion (c.-24-26_170 + 5192del) could not be detected until the second clinical exome sequencing performed by our group [10]. There are several explanations for the delayed diagnosis in our patient's case. The first is that different sequencing technologies were used in two different centres. Unfortunately, copy number variations and gross insertion/deletions can be missed in Ion Torrent sequencing, so MLPA is mostly suggested to detect these variations. Also, the first analysis with Ion Torrent was performed around 10 years before the second one. Therefore, information about the variations causing the syndrome was quite limited. Hence, analysis of bulk sequencing data coming from the whole genome, exome and targeted sequencing is of great importance for the evaluation of testing results.

As the hypoglycaemic attacks continued for so long and repeated at least once a year, brain damage was a risk. After the diagnosis was determined, the patient was given preventive treatment and the sister who is heterozygote for the mutation was advised to have genetic counselling before marriage due to the risk of giving birth to affected children if her husband has heterozygosity for the same mutation. Thus, it is imperative that a rapid and accurate diagnostic method for FBPase deficiency is established.

Conclusion

There is no doubt that next generation sequencing has revolutionized the clinical diagnostic field and increased our understanding of the rarest diseases. However, examples such as our case indicate the importance of data analysis after sequencing is performed. Bias can occur at several stages of bioinformatics analysis, especially during filtering. Therefore, use of correct parameters and repeating the analysis a few times are of high importance.

Learning Points

High-throughput sequencing technology has dramatically changed the nature of molecular diagnosis. When applied to individuals with rare-genetic syndromes, this technology allows scientist to identify genetic variants and also helps to understand the genome structure and function better. In the current study, a patient with rare FBPase

deficiency was diagnosed after 15 years of initial testing using new technologies and planned therapy will improve her life quality. Additionally, this finding showed the importance of genetic counselling and patient management. Counselling will be important for the patient and her family, especially for her sister who is heterozygous for the mutation. The aim is to provide a practical guide for the effective use of this technology which will aid in clinical diagnosis, genetic counselling and patient management.

Research funding: There is no financial interest to report.
Author contributions: All co-authors have seen and agree with the contents of the manuscript.
Conflict of Interest: The authors have no conflicts of interest to declare.
Informed consent: Informed consent was obtained from the parents of the patient.
Ethical approval: The study protocol was approved by ethical committee (NEU/2019/74/923).

References

1. Li N, Chang G, Xu Y, Ding Y, Li G, Yu T, et al. Clinical and molecular characterization of patients with fructose 1,6-bisphosphatase deficiency (in eng). Int J Mol Sci 2017;18:857.
2. Lebigot E, Brassier A, Zater M, Imanci D, Feillet F, Thérond P, et al. Fructose 1,6-bisphosphatase deficiency: clinical, biochemical and genetic features in French patients (in eng). J Inherit Metab Dis 2015;38:881–7.
3. el-Maghrabi MR, Lange AJ, Jiang W, Yamagata K, Stoffel M, Takeda J, et al. Human fructose-1,6-bisphosphatase gene (FBP1): exon-intron organization, localization to chromosome bands 9q22.2–q22.3, and mutation screening in subjects with fructose-1,6-bisphosphatase deficiency (in eng). Genomics 1995; 27:520–5.
4. Santer R, du Moulin M, Shahinyan T, Vater I, Maier E, Muntau AC, et al. A summary of molecular genetic findings in fructose-1,6-bisphosphatase deficiency with a focus on a common long-range deletion and the role of MLPA analysis (in eng). Orphanet J Rare Dis, OriginalPaper 2016;11:1–7, 2016-04-21.
5. Pinheiro FC, Sperb-Ludwig F, Ligabue-Braun R, Schüler-Faccini L, de Souza CF, Vairo F, et al. Genetic analysis of patients with fructose-1,6-bisphosphatase deficiency (in eng). Gene 2019;699: 102–9.
6. Kikawa Y, Shin YS, Inuzuka M, Zammarchi E, Mayumi M. Diagnosis of fructose-1,6-bisphosphatase deficiency using cultured lymphocyte fraction: a secure and noninvasive alternative to liver biopsy (in eng). J Inherit Metab Dis 2002;25: 41–6.
7. NCBI SG. Homo sapiens fructose-bisphosphatase 1 (FBP1), transcript variant 1, m – Nucleotide – NCBI. Available from: https://www.ncbi.nlm.nih.gov/pubmed/ [Accessed 2020].
8. Tran C. Inborn errors of fructose metabolism. What can we learn from them? (in eng). Nutrients 2017;9. https://doi.org/10.3390/nu9040356.
9. Pinto A, Alfadhel M, Akroyd R, Altınok YA, Bernabei SM, Bernstein L, et al. International practices in the dietary management of fructose 1-6 biphosphatase deficiency (in eng). Orphanet J Rare Dis 2018;13:21.
10. Kilic M, Kasapkara CS, Yilmaz DY, Ozgul RK. Exon 2 deletion represents a common mutation in Turkish patients with fructose-1,6-bisphosphatase deficiency (in eng). Metab Brain Dis 2019;34: 1487–91.